DIN NANO FSC

The DIN NANO FSC is a DIN rail electronic regulator which optimises the management of the condenser fans. It helps to reduce energy consumption regulating the condensation temperature according to the external temperature. It can also reduce the sound emissions from the condensing fans during the night.

APPLICATIONS

- Control for electronic fans used on condensing units.
- Control for phase-cutting voltage regulators used to manage the condensation fan speed.

MAIN CHARACTERISTICS

- Analogue output 0-10 V to adjust the speed of the condensation fans.
- Regulation with pressure/temperature probe.
- Acquisition of external temperature to optimise regulation.
- 4 operating modes: normal operation, energy saving, low fan noise, settable constant speed.
- Day/night function (variation of condensation reference).
- Pressure transducer reading display in Bar or in °C (conversion depending on type of refrigerant gas selected).
- 3-figure LED display sign, decimal point and plant status icons.
- RS485 serial connection with Modbus-RTU or Telenet protocol.
- PEGO programming philosophy guaranteeing immediate start-up.
- Power supply 230 V AC.

CONNECTION DIAGRAM

(*) = Configurable function

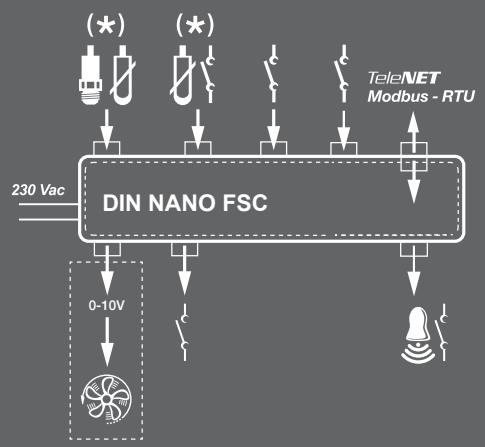

DIN NANO FSC

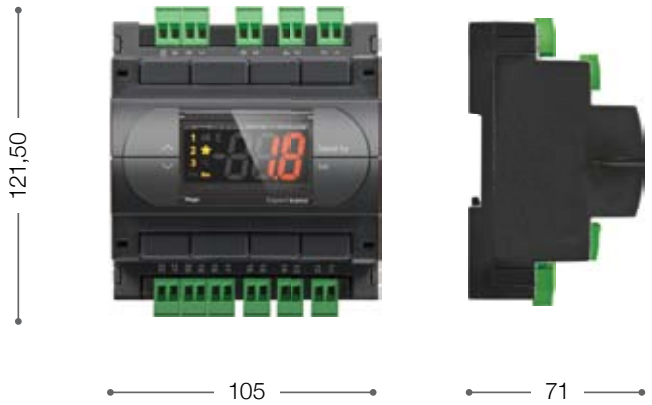

TECHNICAL CHARACTERISTICS	DIN NANO FSC
DIMENSIONS	105 x 121,5 x 71 mm
WEIGHT	0,5 kg
POWER SUPPLY	230 V AC ±10% 50-60 Hz
ABSORBED POWER	5 VA max
WORKING TEMPERATURE	-5 ÷ +50 °C
STORAGE TEMPERATURE	-10 ÷ +70 °C
RELATIVE AMBIENT HUMIDITY	< 90% RH
DISPLAY	3-Digit with sign, decimal point and LED status indicators
CONNECTION	Screw removable clamps
OUTPUTS	
ANALOGUE	1 input for regulation probe (4-20 mA for pressure probe or NTC probes 10 kΩ 1% at 25 °C)
DIGITAL	2 inputs (free voltage contact)
CONFIGURABLE	1 input for NTC probes (10 kΩ 1% at 25 °C) or digital input (free voltage contact)
OUTPUTS	
CONDENSER FAN RELAY	(DO1) N.O. 16(6)A / 250V
ALARM	(DO5) N.O. 8(3)A / 250V
ANALOGUE OUTPUT FOR FAN	0-10 V DC
SUPERVISION SYSTEM	TELENET / MODBUS-RTU